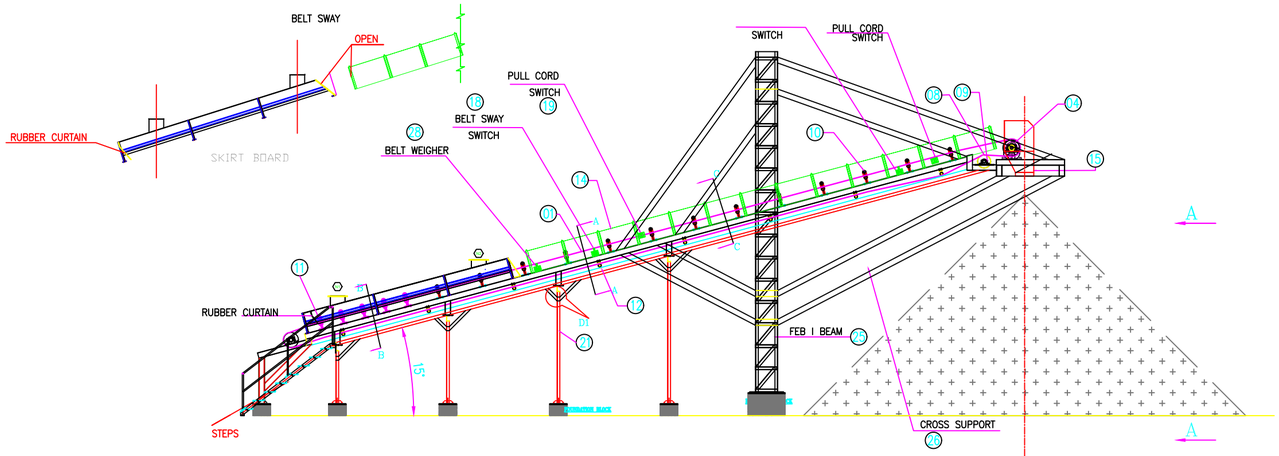

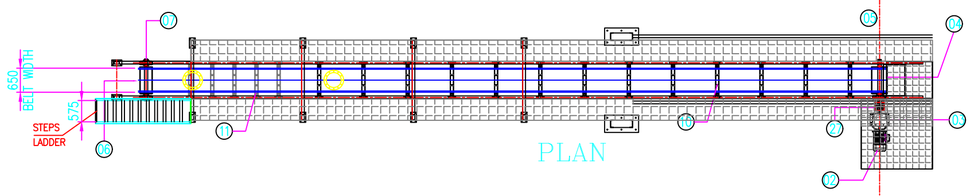

PLAN

FOUNDATION PLAN

DISCHARGE CENTER LINE

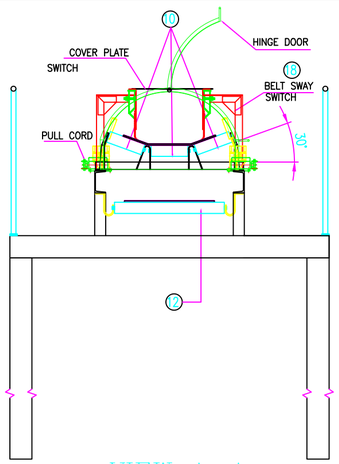

VIEW A–A

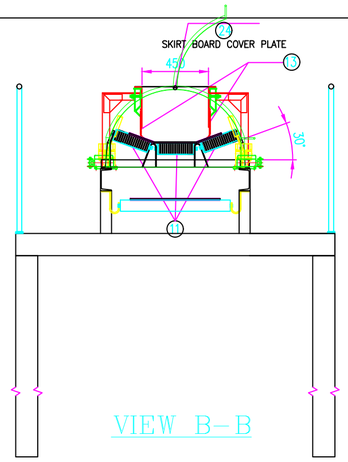

VIEW B–B

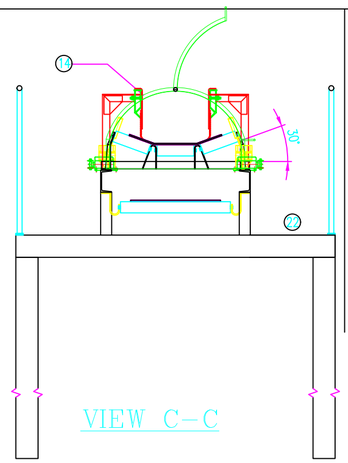

VIEW C–C

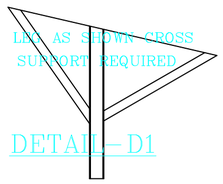

DETAIL–D1

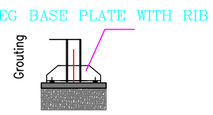

DERAIL–D2

SR. NO.	DESCRIPTION	MATERIAL	QTY	SCOPE
29	Emergency Switch (at Drive & Non-drive End (The Cable will be in Client scope).	STD		
28	BELT WEIGHER	STD	1 NOS	CLIENT SCOPE
27	GEAR COUPLING	NGC	1 NOS.	
26	OVERHANGING PLATFORM CROSS SUPPORT TIE MEMBERS–CHANNEL–150	MS	2 NOS.	
25	OVERHANGING PLATFORM VERTICAL SUPPORT LEG–250 I BEAM	MS	3 NOS.	
24	SKIRT BOARD TOP COVER PLATE	MS	1 NOS.	
23	ALL SAFETY GUARDS	MS		
22	SIDE WALK WAY WITH GRATINGS (75 X 75) & SUPPORT LEG, HAND RAILING–25 NB PIPE)	MS		
21	SUPPORT STRUCTURE LEG	MS	1 LOT.	
20	ZERO SPEED SWITCH	STD	1 NOS	CLIENT SCOPE
19	END LESS PULL CORD	STD	1 NOS	–
18	BELT SWAY SWITCH	STD	2 NOS	–
17	EXTERNAL SCRAPER	MS	1 SET	
16	INTERNAL SCRAPER	MS	1 SET	
15	DISCHARGE CHUTE	MS	1 NO.	
14	HOOD	–	1 SET	
13	SKIRT BOARD (INLET AREA)	MS	1 NO.	
12	RETURN IDLER	MS Ø89	8 NOS.	
11	IMPACT IDLER (SET OF 3 ROLLER) (Ø110 RUBBER RING TYPE)	MS	5 SET	
10	CARRYING IDLER (SET OF 3 ROLLER)	MS Ø89 DIA X 250 LG	13 SET	
09	SNUB PULLEY BEARING & PLUMMER BLOCK	BEARING (NTN) : –2213K PLUMMER BLOCK : SN513	2 SET	
08	SNUB PULLEY 350 NB	MS	1 NOS.	
07	TAIL PULLEY BEARING & PLUMMER BLOCK	BEARING (NTN) : –2216K PLUMMER BLOCK : SN518	2 SET	
06	TAIL (NON DRIVE) PULLEY–400 NB	MS	1 NOS.	
05	HEAD PULLEY BEARING & PLUMMER BLOCK	BEARING (NTN) : –2220K PLUMMER BLOCK : SN520	2 SET	
04	HEAD (DRIVE) PULLEY–450 OD (WITH RUBBER LAGGING & HERRING BONE)	MS	1 NOS.	
03	GEARBOX–36 RPM	PBL Make	1 NOS.	–
02	MOTOR–10 HP, 3ϕ, 415V, 50HZ , IE3 (VFD SUITABLE)	ABB Make	1 NOS.	–
01	BELT 3 PLY–650 WIDTH	RUBBER–M24 GRADE	1 NO.	

FOURTECKH ENVIRO (I) PVT. LTD.

CLIENT		
CONSULTANT		
PROJECT		
DRN	–	–
CHKD	–	–
APPD	–	–
SCALE	NTS	

TITLE:
GA DRAWING OF TROUGH TYPE BELT CONVEYOR

REV.NO.	DATE	REVISION	DRAWN/PREP. BY

JOB No.: | SHEET 1 OF 1 | DRG. NO.: FEI–000 | REV 00